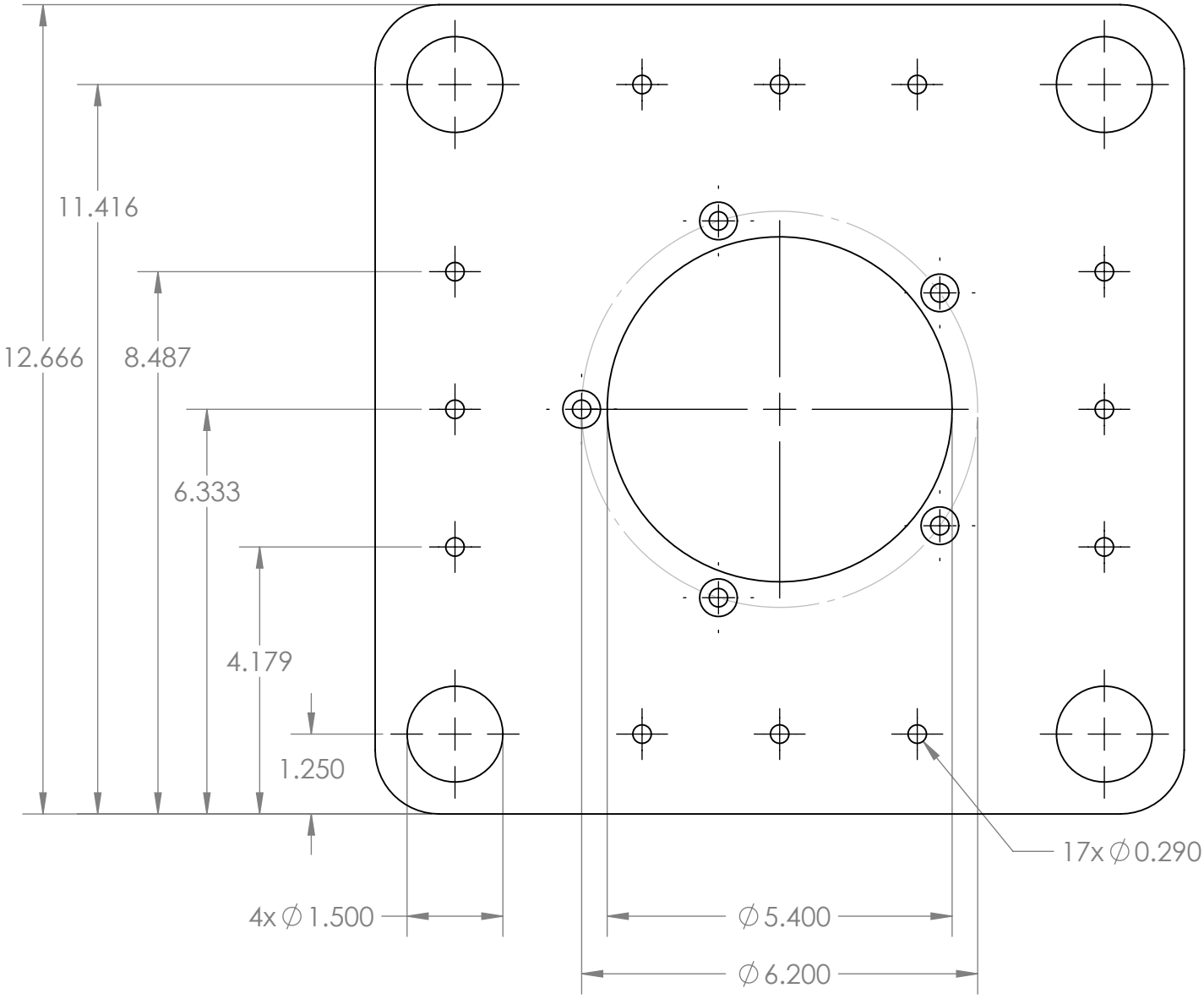

Copyright 2014 Marginally Clever Robotics
http://marginallyclever.com/

All dimensions in cm.